Rev.	Description	Date
A0	New release	2020.08.26

1.PHYSICAL CHARACTERISTICS(mm)

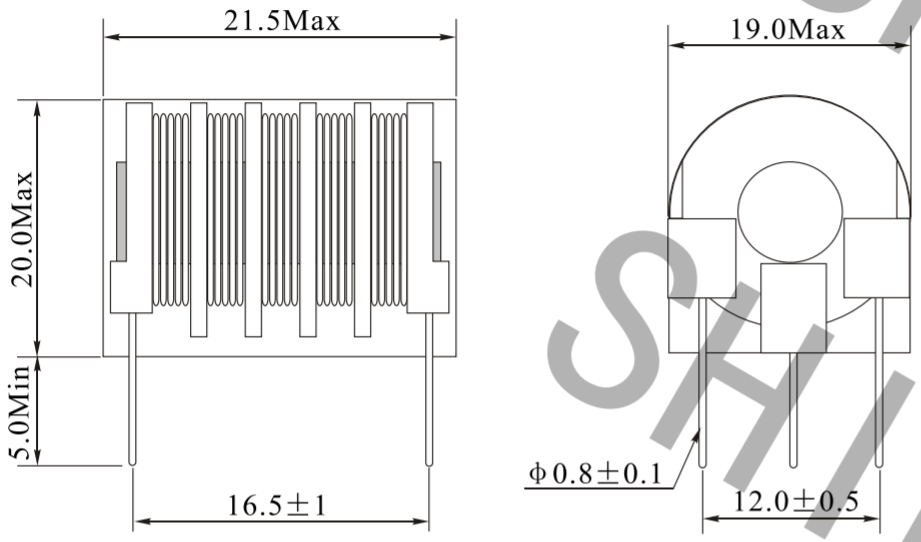

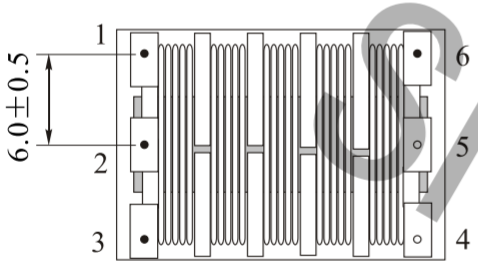

2.ELECTRONICAL SCHEMATIC

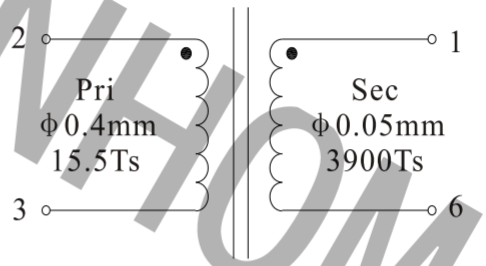

3.ELECTRONICAL SPECIFICATIONS

Inductance:	Pin2-3:	8uH±20%@1KHz,1V
	Pin1-6:	375mH±20%@1KHz,1V
DCR:	Pin2-3:	120mΩ Max
	Pin1-6:	1.5KΩ Max
Turns ratio:	Sec:Pri=251.6:1	
Hi-Pot:	3KVac,5mA,1min Pri to Sec	

NOTES:

Temp 20℃ 48%RH

RoHS Compliant

NEME:	Pulse transformer		
CUSTOMER P/N:		DATE:	2020-08-26
SHINHOM P/N:	HT0615-251	REV: A0	PAGE
DRAWN BY	CHECKED BY	APPROVE BY	

SHINHOM

SHAANXISHINHOM ENTERPRISE CO LTD

The Document property belong to SHINHOM & is not allowed to be duplicated without authorization

SHINHOM SHINHOM SHINHOM

Rev.	Description	Date
A0	New release	2022.03.28

1.PHYSICAL CHARACTERISTICS(mm)

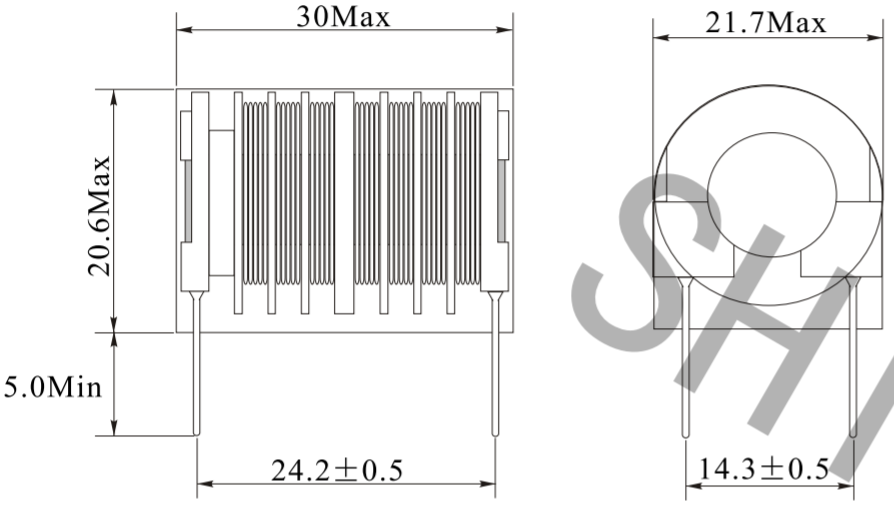

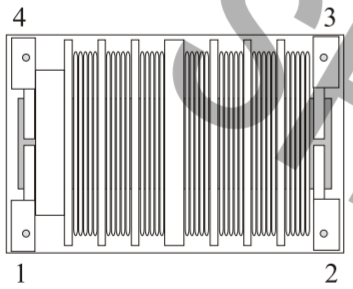

2.ELECTRONICAL SCHEMATIC

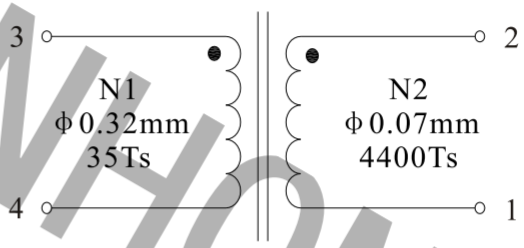

3.ELECTRONICAL SPECIFICATIONS

Turns ratio: 35:4400

Inductance: N1: 105uH±20%@1.0KHz,1V

N2: 580mH±20%@1.0KHz,1V

Note:

1.Solderability:leads shall meet MIL-STD-202, Method 208D for solderability.

2.Flammability: UL94V-0

3.ASTM oxygen index: >28%

Test Instrument: WK3260B+3261A

NOTES:

Temp 20℃ 48%RH

RoHS Compliant

NAME:	High voltage transformer		
CUSTOMER P/N:		DATE:	2022-03-28
SHINHOM P/N:	HT0828-35-4400	REV: A0	PAGE
DRAWN BY	CHECKED BY	APPROVE BY	

SHINHOM

SHAANXISHINHOM ENTERPRISE CO LTD

The Document property belong to SHINHOM & is not allowed to be duplicated without authorization

SHINHOM SHINHOM SHINHOM

Rev.	Description	Date
A0	New release	2016.11.03

1.PHYSICAL CHARACTERISTICS(mm)

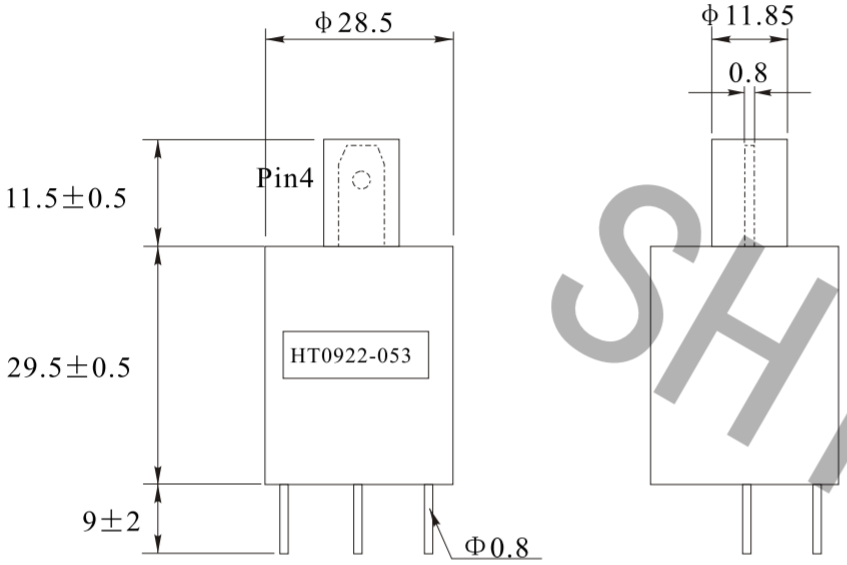

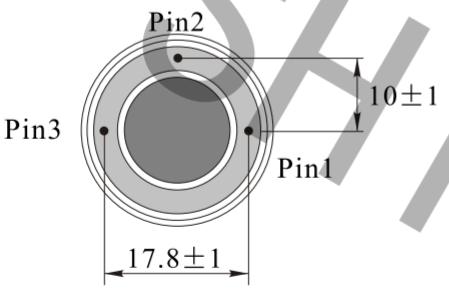

2.ELECTRONICAL SCHEMATIC

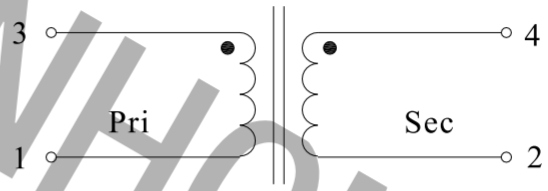

3.ELECTRONICAL SPECIFICATIONS

T urns ratio:	Pri:Sec=1:53
Pri DCR:	100mΩMax
Sec DCR:	300ΩMax
Pri inductance:	17.5uH ±5uH@1.0Hz,1V
Sec inductance:	50mH ±10mH@1.0Hz,1V

4.MATERIAL LIST

No	MATERIAL	MATERIAL SPEC	PROVIDER	UL.NO
1	Epoxy	102GF30UVW Transparent	Beijing hanlun industrial plastics Co.,Ltd	E243880
2	WIRE	MW79#	Xu zhou shengbao industryCo.,Ltd	E194766
3	Bobbin	PBT4130 White	Yun Cheng plsadtics Co., Ltd	F48285CM
4	Shell	ABS PA-765A Black	Chi Mei Corporation	E56070

NAME:	High voltage ignition coil		
CUSTOMER P/N:		DATE:	2016-11-03
SHINHOM P/N:	HT0922-053	REV: A0	PAGE
DRAWN BY	CHECKED BY	APPROVE BY	

SHINHOM

SHAANXISHINHOM ENTERPRISE CO LTD

The Document property belong to SHINHOM & is not allowed to be duplicated without authorization

SHINHOM SHINHOM SHINHOM

Rev.	Description	Date
A0	New release	2021.12.16

1.PHYSICAL CHARACTERISTICS(mm)

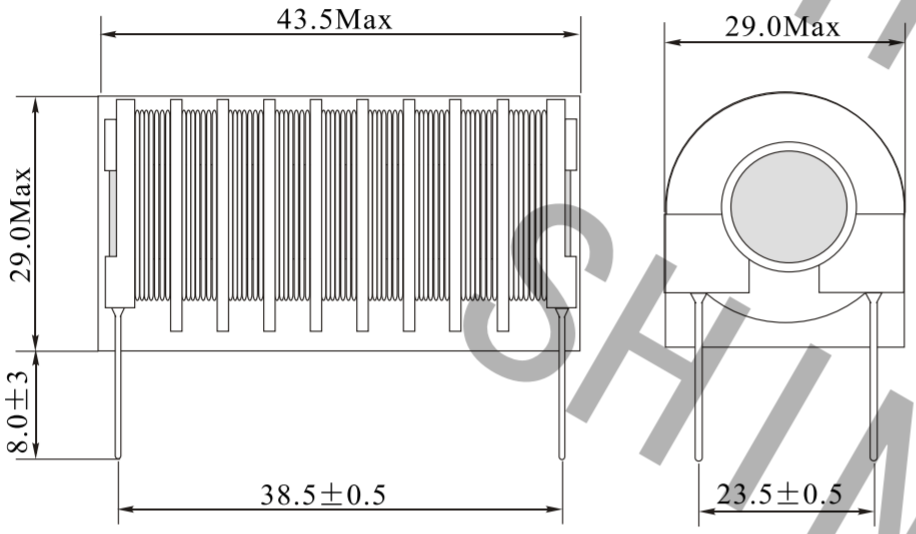

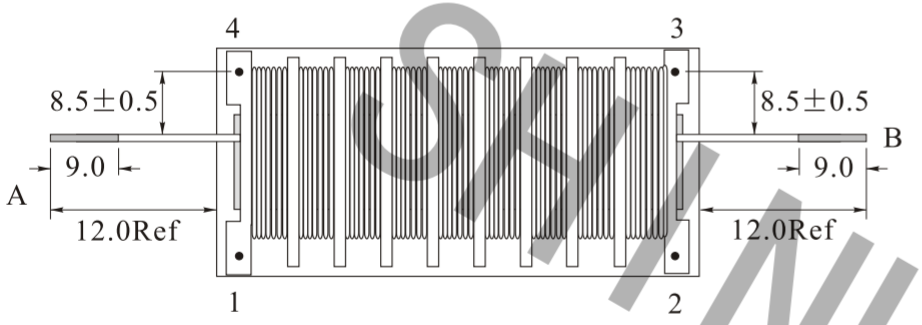

2.ELECTRONICAL SCHEMATIC

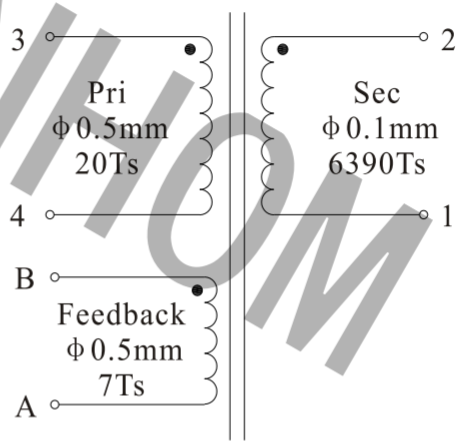

3.ELECTRONICAL SPECIFICATIONS

Inductance: Pin3-4: 20.0uH±20%@1KHz,0.1V

Pin2-1: 1.4H±20%@1KHz,0.1V

Turns ratio: Sec:Pri=6390:20

DCR: Pin3-4: 72mΩ ±10%

Pin2-1: 815Ω ±7%

Operating temperature: -25℃ to +105℃

NOTES:

Temp 20℃ 48%RH

RoHS Compliant

NEME:	Ignition transformer		
CUSTOMER P/N:		DATE:	2021-12-16
SHINHOM P/N:	HT1040-642-3	REV: A0	PAGE
DRAWN BY	CHECKED BY	APPROVE BY	

SHINHOM

SHAANXISHINHOM ENTERPRISE CO LTD

The Document property belong to SHINHOM & is not allowed to be duplicated without authorization

SHINHOM SHINHOM SHINHOM

Rev.	Description	Date
A0	New release	2021.11.09

1.PHYSICAL CHARACTERISTICS(mm)

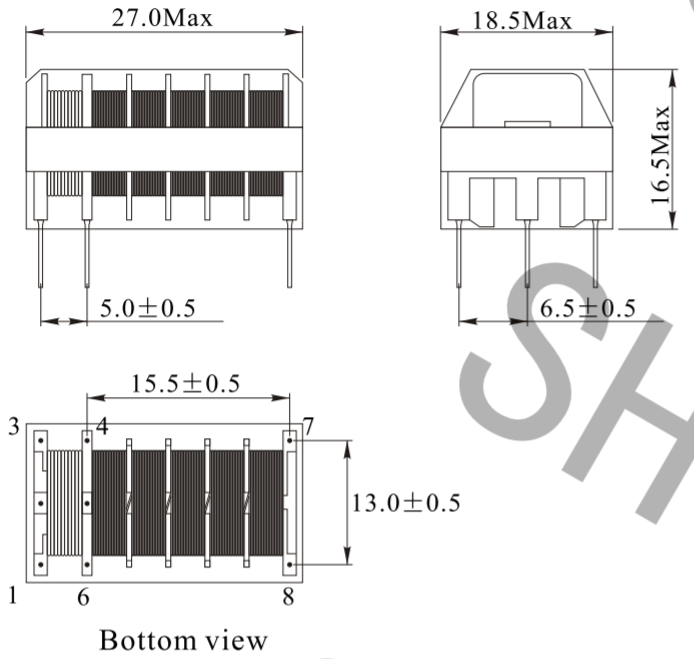

2.ELECTRONICAL SCHEMATIC

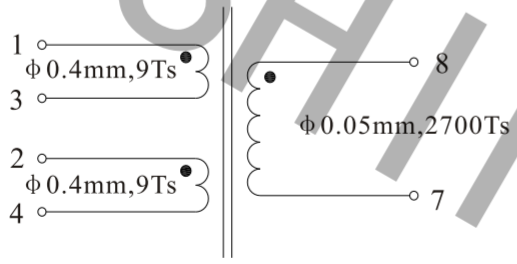

3.ELECTRONICAL SPECIFICATIONS

Inductance(1-3)=(2-4): 7~16uH@1KHz,0.1V

DCR(1-3)=(2-4): 37mΩ ±20%

Inductance(8-7): 1.0H ±20%@1KHz,0.1V

DCR(8-7): 650Ω ±20%

4. MATERIALS

No.	Name	Ratings	Manufacturer name
1	magnetic core	EEL16 PC40	SONGNA
2	copper wire	ϕ0.05mm 2UEW	JINGWEI
		ϕ0.4mm 2UEW	
3	adhesive tape	130℃	WENLIAN
4	skeleton	150℃	ZHISHENG
5	epoxy	TA228	PINTE
6	curing agent	B2006	PINTE
7	tin	Green tin	HONGXINGWEI

NAME:	High voltage transformer		
CUSTOMER P/N:		DATE:	2021-11-09
SHINHOM P/N:	HT16L-2700-18	REV: A0	PAGE
DRAWN BY	CHECKED BY	APPROVE BY	

SHINHOM

SHAANXISHINHOM ENTERPRISE CO LTD

The Document property belong to SHINHOM & is not allowed to be duplicated without authorization

SHINHOM SHINHOM SHINHOM

Rev.	Description	Date
A0	New release	2022.06.28

1.PHYSICAL CHARACTERISTICS(mm)

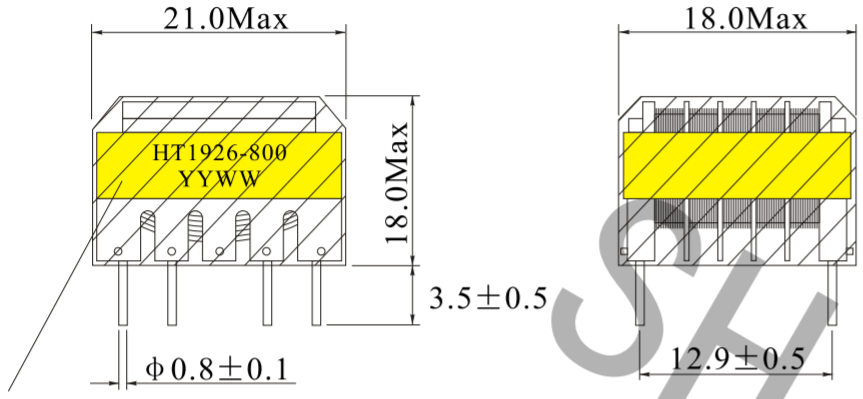

Mark label before encapsulation

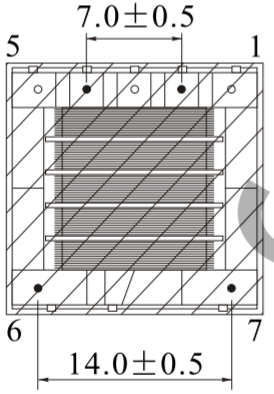

Note: Secondary correct output mode

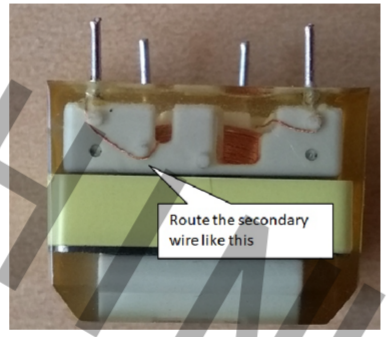

2.ELECTRONICAL SCHEMATIC

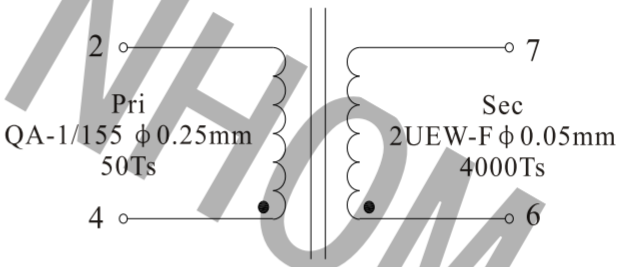

3.ELECTRONICAL SPECIFICATIONS

Turns ratio: Pri : Sec=1:80

Inductance(2-4): 190uH ± 20%@10KHz,0.1V

Inductance(7-6): 960mH ± 20%@10KHz,0.1V

Operating temperature: -25℃ to 85℃

NOTES:
Temp 20℃ 48%RH
RoHS Compliant

NEME:	High voltage transformers		
CUSTOMER P/N:		DATE:	2022-06-28
SHINHOM P/N:	HT1926-800	REV: A0	PAGE
DRAWN BY	CHECKED BY	APPROVE BY	

SHINHOM
SHINHOM SHAANXISHINHOM ENTERPRISE CO LTD

The Document property belong to SHINHOM & is not allowed to be duplicated without authorization

SHINHOM SHINHOM SHINHOM

Rev.	Description	Date
A0	New release	2018.07.11

1.PHYSICAL CHARACTERISTICS(mm)

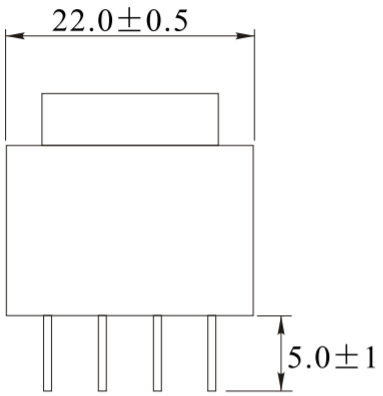

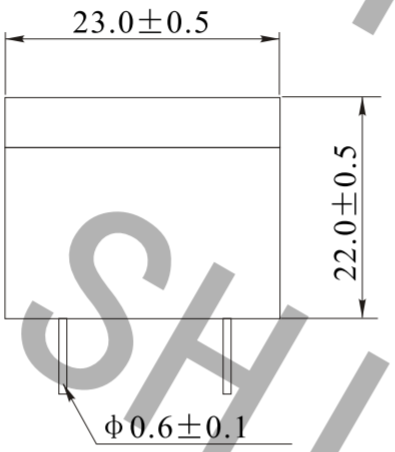

2.ELECTRONICAL SCHEMATIC

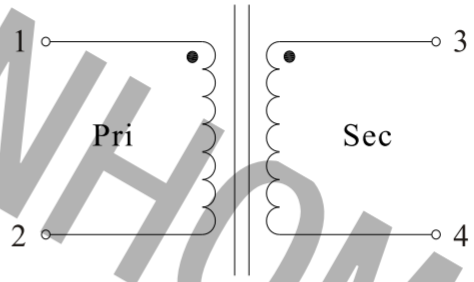

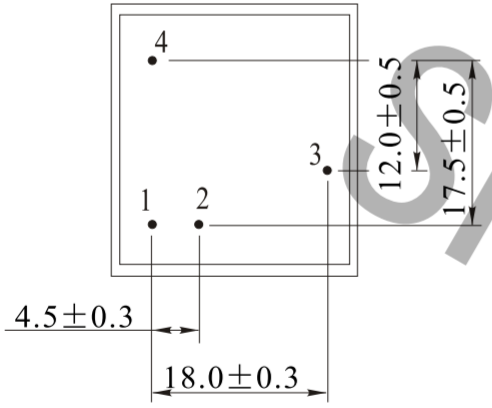

Top Marking

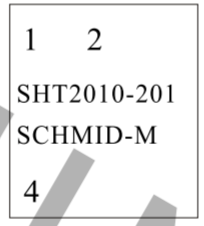

3.ELECTRONICAL SPECIFICATIONS

Turns ratio: 1:200

Pri voltage: 10~200V

Sec voltage: 22kV Min

Pri DCR: 26mΩ ±15%

Sec DCR: 520Ω ±15%

Pri inductance: 6uH±15%@100Hz,0.3V

Sec inductance: 240mH±15%@100Hz,0.3V

Output power: 1W

Noload work time: 30S

Operating temperature: 0℃ to +80℃

NOTES:

Temp 20℃ 48%RH

RoHS Compliant

NAME:	High voltage transformers		
CUSTOMER P/N:		DATE:	2018-07-11
SHINHOM P/N:	HT2010-201	REV: A0	PAGE
DRAWN BY	CHECKED BY	APPROVE BY	

SHINHOM

SHAANXISHINHOM ENTERPRISE CO LTD

The Document property belong to SHINHOM & is not allowed to be duplicated without authorization

SHINHOM SHINHOM SHINHOM

Rev.	Description	Date
A0	New release	2020.04.28

1.PHYSICAL CHARACTERISTICS(mm)

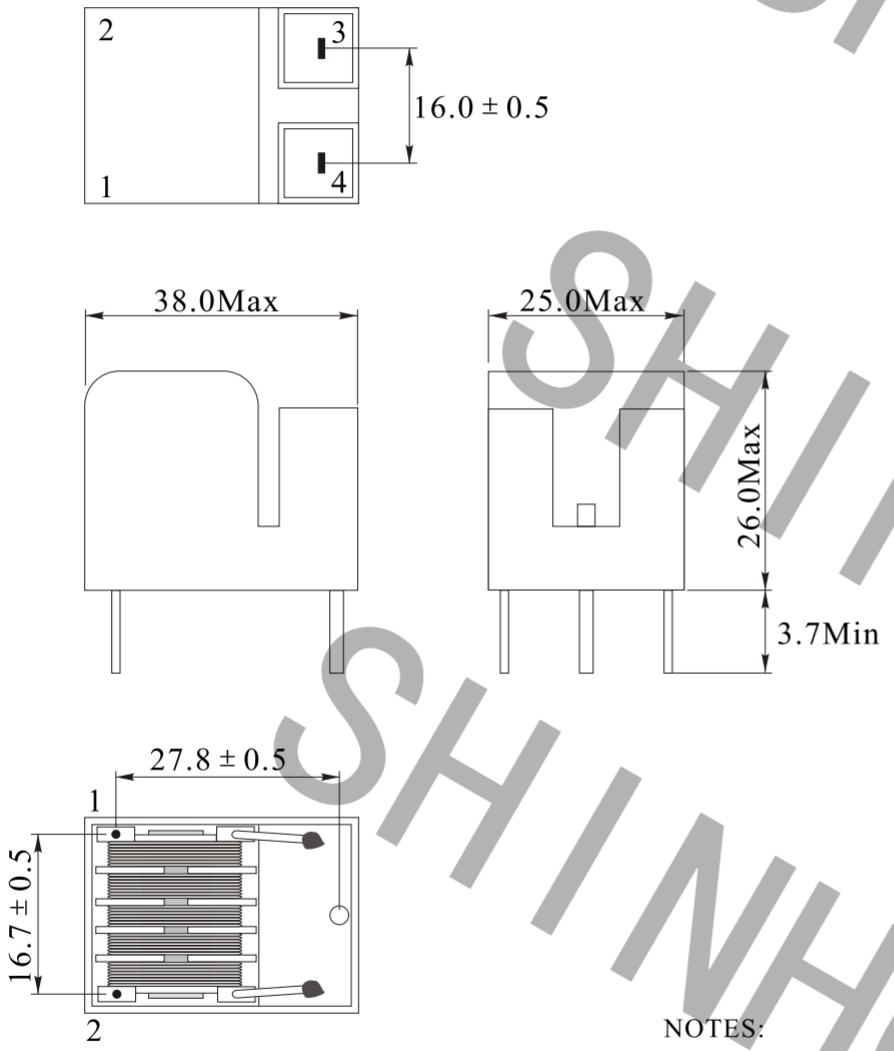

2.ELECTRONICAL SCHEMATIC

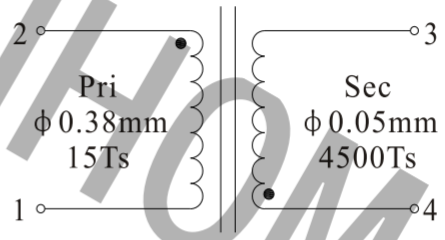

3.ELECTRONICAL SPECIFICATIONS

Inductance: Pin2-1: 10uH ± 20%@1KHz,0.3V

Pin4-3: 500mH ± 20%@1KHz,0.3V

Turns ratio: Sec:Pri=300 Ref

DCR: Pin2-1: 80mΩ ± 20%

Pin4-3: 1600Ω ± 20%

NOTES:

Temp 20℃ 48%RH

RoHS Compliant

NEME:	Ignition transformer		
CUSTOMER P/N:	2179	DATE:	2020-04-28
SHINHOM P/N:	HT2528V-241-2	REV: A0	PAGE
DRAWN BY	CHECKED BY	APPROVE BY	

SHINHOM

SHAANXISHINHOM ENTERPRISE CO LTD

TEL:+86-029-87851838
FAX:+86-029-87851840
ZIP:710054
Http://www.shinhom.com
E-mail:shinhom@globalsources.com
sales@shinhom.com.cn
NO. 8, Yanta Northern Road,Xi'an ShaanxiPro.China

SHINHOM SHINHOM SHINHOM

Rev.	Description	Date
A0	New release	2022.05.17

1.PHYSICAL CHARACTERISTICS(mm)

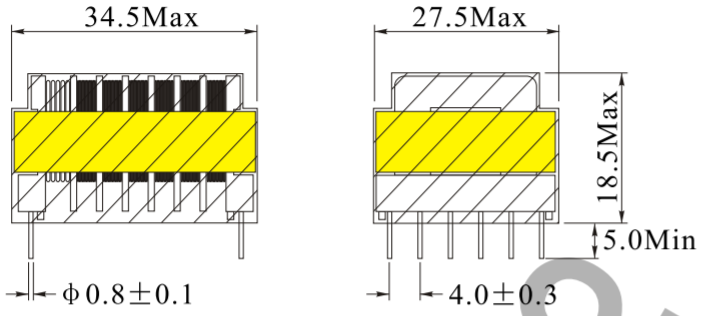

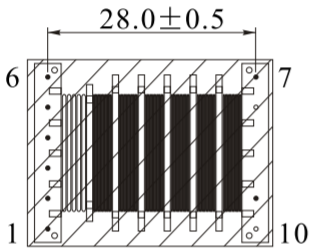

Bottom view

Cut off pin8,10

2.ELECTRONICAL SCHEMATIC

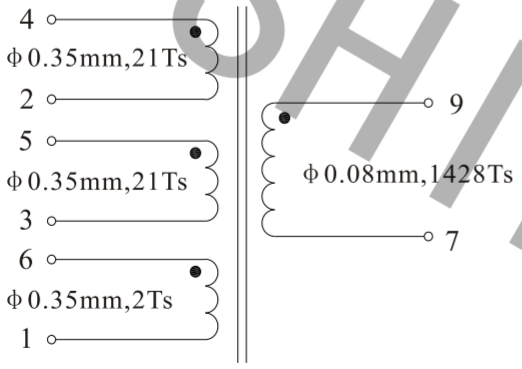

3.ELECTRONICAL SPECIFICATIONS

Inductance(4-2): 99uH±20%@1KHz,0.1V

DCR(4-2): 0.15Ω ±20%

Inductance(9-7): 365mH ±17%@1KHz,0.1V

DCR(9-7): 191Ω ±20%

Test Instrument:

L: HP4284A

RDC: HM2540

Note:

1.Solderability:leads shall meet MIL-STD-202, Method 208D for solderability.

2.Flammability: UL94V-0

3.ASTM oxygen index: >28%

SHINHOM SHINHOM SHINHOM

NAME:	High voltage transformer		
CUSTOMER P/N:	EEH2513	DATE:	2022-05-17
SHINHOM P/N:	HT25L-1482-44	REV: A0	PAGE
DRAWN BY	CHECKED BY	APPROVE BY	

SHINHOM

SHINHOM

SHAANXISHINHOM ENTERPRISE CO LTD

The Document property belong to SHINHOM & is not allowed to be duplicated without authorization

Rev.	Description	Date
A0	New release	2017.03.20

1.PHYSICAL CHARACTERISTICS(mm)

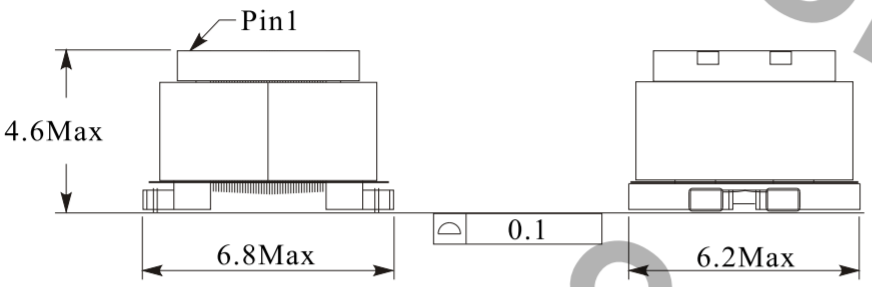

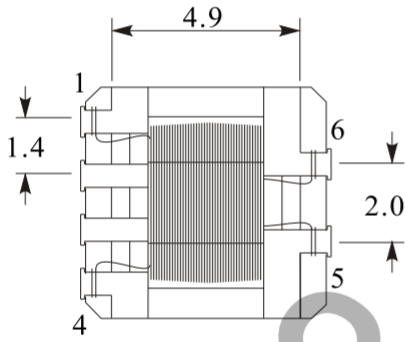

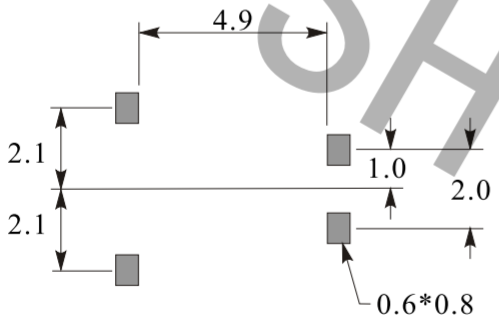

Recommended LAN Pattern

2.ELECTRONICAL SCHEMATIC

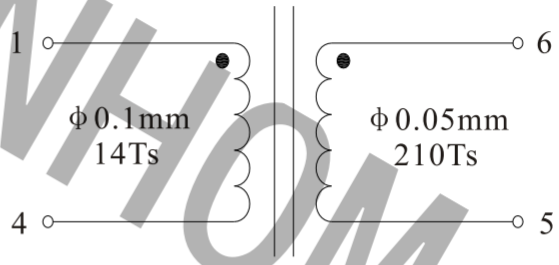

3.ELECTRONICAL SPECIFICATIONS

Turns ratio:	(1-4):(6-5)=1:15
L(1-4):	15uH±10% @1.0KHz,1V
Lk:	0.3uH Max@100KHz,0.1V
DCR(1-4):	1.0Ω Max
DCR(6-5):	25Ω Max
Ipk:	1.2A
Inductance(Ipk):	13.5uH Min@1.0KHz,1V
Ambient temperature:	-40℃ to +125℃
Operating temperature:	-40℃ to +125℃

SHINHOM SHINHOM SHINHOM

NAME:	High voltage transformers		
CUSTOMER P/N:	CJ5143-AL	DATE:	2017-03-20
SHINHOM P/N:	HT5143	REV: A0	PAGE
DRAWN BY	CHECKED BY	APPROVE BY	

SHINHOM

SHINHOM

SHAANXISHINHOM ENTERPRISE CO LTD

The Document property belong to SHINHOM & is not allowed to be duplicated without authorization

MECHANICAL DIMENSION:(UNIT:mm)

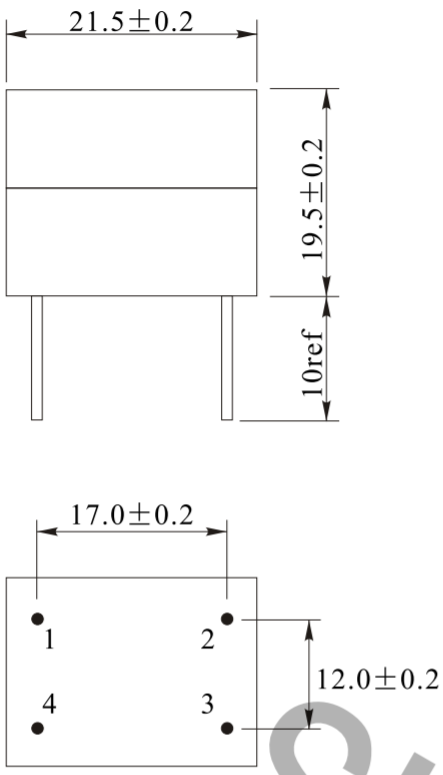

WINDING:

WDG	TERMINAL	WIRE SIZE	TURNS	REMARKS
N1	4-3	ϕ0.4mm	35TS	
N2	1-2	ϕ0.06mm	3200TS	

ELECTRICAL CHARACTER:

NO.	ITEM	MEASURED POINT	TECHNICAL DATA	TEST CONDITION & INSTRUMENT
1	Inductance	4-3	31.5uH±10%	1KHz 0.25V
		1-2	250mH±10%	
2	DCR	4-3	115mΩ ±10%	HM2540
		1-2	700Ω ±10%	

MATERIAL LIST:

NO.	ITEM	MATERIALS	RATING	FILE NO	SUPPLIERS
1	CORE	R6.5X21	---	---	SHANDONG ZHAOYUAN GAOXIANGDI ANZIYOUXIAN GONGSI CO.,LTD
2	WIRE	EIW (POLYESTERIMIDE)	180℃	E85640	TAH ELECTRIC WIRE&CABLE CO.,LTD
3	BOBBIN	PBT	130℃	E130155	NAN YA PLASTICS CORP
4	EPOXY	HASUNCAST 3010	110℃	E86165	SHENZHENSHI HUASHENGTONGCHUAN GKEJIYOUXIANGONGSI CO.,LTD

SCHEMATIC:

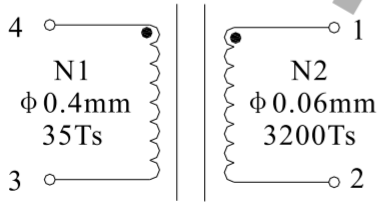

NAME:	Ignition Transformers		
CUSTOMER P/N:		DATE:	2011-06-02
SHINHOM P/N:	HT6521	REV: A0	PAGE
DRAWN BY	CHECKED BY	APPROVE BY	

SHINHOM
SHAANXISHINHOM ENTERPRISE CO LTD

The Document property belong to SHINHOM & is not allowed to be duplicated without authorization

SHINHOM SHINHOM SHINHOM

1.PHYSICAL CHARACTERISTICS(mm)

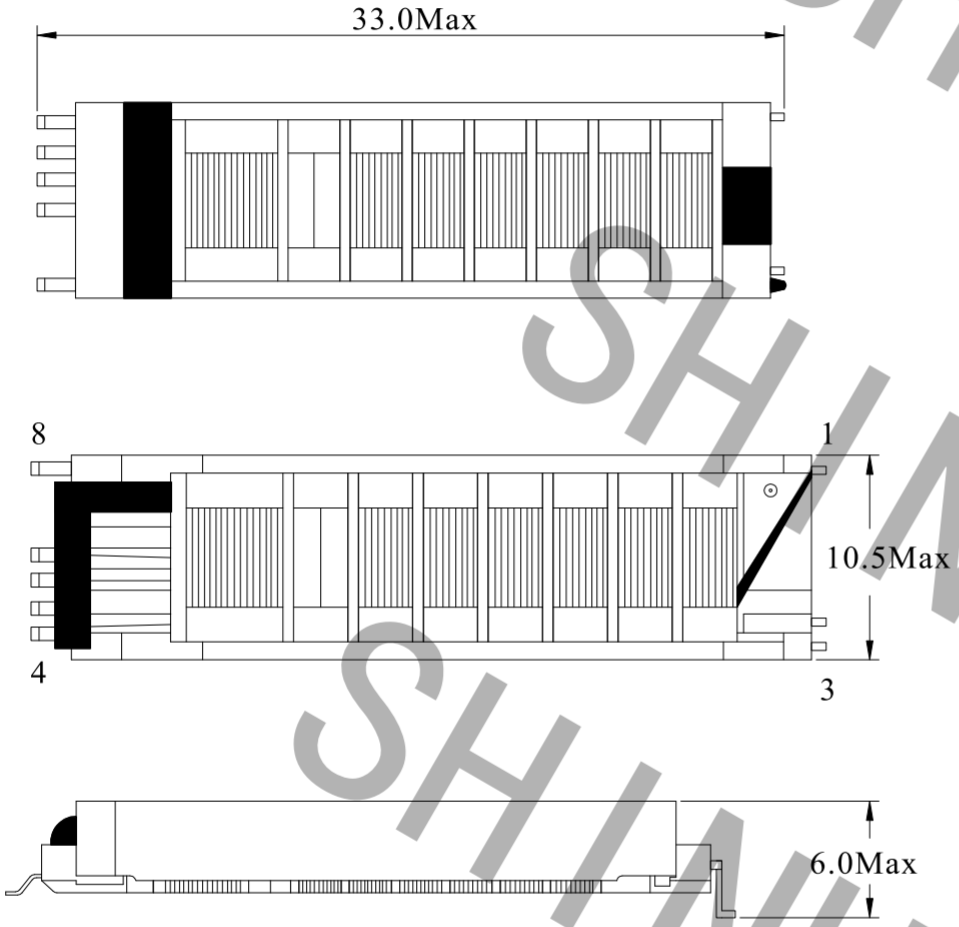

2.ELECTRONICAL SCHEMATIC

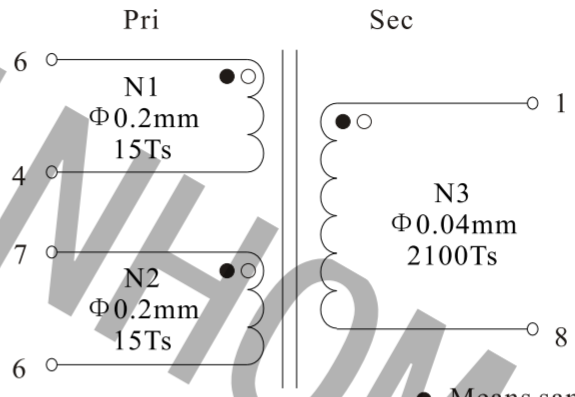

● Means same phase.
○ Means start pin.

3.ELECTRONICAL SPECIFICATIONS

Inductance: Pin1-8: 0.68H Min@1KHz,1V
Pin6-4: 32.8uH Min@1KHz,1V
Pin7-6: 32.8uH Min@1KHz,1V

Lk: Pin1-8: 0.23mH±15%@40KHz,1V
Pin6-4: 11uH±15%@40KHz,1V
Pin7-6: 11uH±15%@40KHz,1V

DCR: Pin1-8: 0.67KΩ Max
Pin6-4: 0.2Ω Max
Pin7-6: 0.19Ω Max

Hi-Pot: Pri-Sec: 3.0KVac,5mA,2S
Pri-Core: 1.0KVac,5mA,2S
Sec-Core: 3.0KVac,5mA,2S

NOTES:
Temp 25℃ 48%RH
RoHS Compliant

NAME:	Transformer		
CUSTOMER P/N:	FT-BIT0908A	DATE:	2012-05-29
SHINHOM P/N:	HTUI98-032	REV: A0	PAGE
DRAWN BY	CHECKED BY	APPROVE BY	

SHINHOM
SHAANXISHINHOM ENTERPRISE CO LTD

The Document property belong to SHINHOM & is not allowed to be duplicated without authorization

SHINHOM SHINHOM SHINHOM

HTS Series High-voltage ignition Transformer

1. Outline:

HTS Series High-voltage ignition transformers are widely used in many installation's ignition such as small burners,fuel&gas burners,integrated burners,industrial combustion equipment etc.

2. Technical parameters:

	HTS-7	HTS□-8B	HTS□-10A
Input	Voltage: 220V/50Hz	Voltage: 220V/50Hz	Voltage: 220V/50Hz
	Current: ≤0.7A	Current: ≤1.1A	Current: ≤1.2A
Output	Voltage: ≥1x7KV or ≥2x4KV	Voltage: ≥1x8KV	Voltage: ≥2x5KV
	Current: ≥15mA	Current: ≥20mA	Current: ≥20mA
Outline dimension	92X70X57mm	110X86X68mm	110X86X68mm
Ignition distance	3~4mm	3~5mm	3~6mm
Ignition efficiency within 3 minutes	Interval time 20%	Interval time 33%	Interval time 33%
	Continuous -----	Continuous 100%	Continuous 100%
output type	Swingle polar、Bipolar	Swingle polar	Bipolar
output form	Lead wire	Lead wire/Plug-in unit	Lead wire/Plug-in unit
USE	Ignition of smaller burners ,fuel gas burners,integrated burners,industrial combustion equipment etc.		

3. Order description:

HTS □ - □ A L Z F

- F: Input lead wire: F: quad core wire ,omitted for triple core wire
- Z: Output plug-in unit Z: Self-tapping Screw，omitted for common Clip
- L: Working method: L : continuous work ,omitted for interval work (ignition efficiency within 3 minutes is 33%)
- A: Output type: A Bipolar output(for fuel use)/B: Monopole (for gas use)
- □: Output class: 7:7KV / 8:8KV / 10:10KV
- □: Input form: C: plug-in unit ,omitted for power lead wire
- HTS: Type classification : HTS: Plastic case ignition transformer

4.Product type table for chosen

Output voltage	Output type		Work type		Input form		Output form		Input lead wire	
	Swingle	Bipolar	Continuous	Interval time	Plug-in unit	Lead wire	Self -tapping	omitted for common	triple core wire	quad core wire
7KV	√	√	X	√	X	√	√	√	√	√
8KV	√	X	√	√	√	√	√	√	√	√
10KV	X	√	√	√	√	√	X	√	√	X

√: Optional

X: Not optional

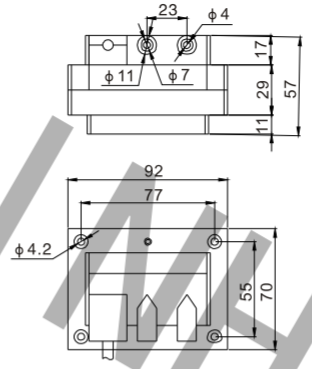

Note:The double color wire must be well grounded when you use the transformers

Technical parameters:

HTS-7A
- Input: 220V,≤0.7A,50Hz
- Output: ≥2x4KV,15mA
- Outline dimension: 92X70X57mm
- Ignition distance: 3~4mm
- Ignition efficiency within 3 minutes: 20%
- Output plug-in unit: Self-tapping / Omitted for common

HTS-7B
- Input: 220V,≤0.7A,50Hz
- Output: ≥1x7KV,15mA
- Outline dimension: 92X70X57mm
- Ignition distance: 3~4mm
- Ignition efficiency within 3 minutes: 20%
- Output plug-in unit: Self-tapping / Omitted for common

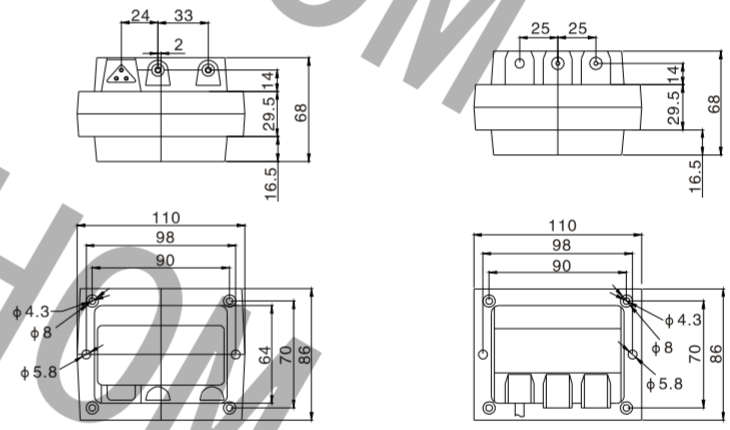

Note:The double color wire must be well grounded when you use the transformers

Technical parameters:

HTS-8B
- Input: 220V,≤1.1A,50Hz
- Output: ≥1x8KV,20mA
- Outline dimension: 110X86X68mm
- Ignition distance: 3~5mm
- Ignition efficiency within 3 minutes: 33% / 100%
- Input form: Plug-in unit / Lead wire
- Output form: Self-tapping / Omitted for common

HTS-10A
- Input: 220V,≤1.2A,50Hz
- Output: ≥2x5KV,20mA
- Outline dimension: 110X86X68mm
- Ignition distance: 3~6mm
- Ignition efficiency within 3 minutes: 33%
- Output form: Plug-in unit / Lead wire

HTS-10AL
- Input: 220V,≤0.6A,50Hz
- Output: ≥2x4KV,15mA
- Outline dimension: 110X86X68mm
- Ignition distance: 3~6mm
- Ignition efficiency within 3 minutes: 100%
- Output form: Plug-in unit / Lead wire

SHINHOM

HT Series High-voltage ignition Transformer

1. Outline:

HT Series high voltage ignition transformers are widely used in many kinds of installation's ignition such as kitchen equipment burners,small burners,fuel&gas burners,tunnel kiln burners， integrated burners,radiant tube burners,high velocity burners ,industrial furnace etc.

2. Technical parameters:

	HT-6	HT-8	HT-10	HT-14
Input	Voltage: 220V/50Hz	Voltage: 220V/50Hz	Voltage: 220V/50Hz	Voltage: 220V/50Hz
	Current: ≤0.7A	Current: ≤1.1A	Current: ≤1.2A	Current: ≤1.8A
Output	Voltage: ≥1x6KV	Voltage: ≥1x8KV	Voltage: ≥2x5KV	Voltage: ≥2x7KV
	Current: ≥15mA	Current: ≥20mA	Current: ≥20mA	Current: ≥25mA
Outline dimension	82X69X67mm	100X92X73mm	100X92X73mm	100X92X73mm
Ignition distance	2~3mm	3~5mm	3~5mm	4~6mm
Ignition efficiency within 3 minutes	Interval time 33%	Interval time 33%	Interval time 33%	Interval time 25%
	Continuous -----	Continuous 100%	Continuous 100%	Continuous -----
output type	Swingle polar、Bipolar	Swingle polar、Bipolar	Bipolar	Bipolar
output form	Lead wire/Plug-in unit	Lead wire/Plug-in unit	Lead wire/Plug-in unit	Lead wire/Plug-in unit
USE	many kinds of installation's ignition such as kitchen equipment burners,small burners,fuel&gas burners, tunnel kiln burners	Ignition of smaller burners ,fuel gas burners,integrated burners,industrial combustion equipment etc.		

3. Order description:

HT □ - A L C F

- F: Input lead wire: F: quad core wire ,omitted for triple core wire
- C: Output plug-in unit C: plug-in unit ,omitted for high voltage lead wire
- L: Working method: L : continuous work ,omitted for interval work (ignition efficiency within 3 minutes is 33%)
- A: Output type: A Bipolar output(for fuel use)/B: Monopole (for gas use)
- □: Output class: 6:6KV / 8:8KV / 10:10KV/14:14KV
- HT: Type classification : HT: Iron case ignition transformers

4.Product type table for chosen

Output voltage	Output type		Work type		Output form		Input lead wire	
	Swingle	Bipolar	Continuous	Interval time	Plug-in unit	Lead wire	triple core wire	quad core wire
6KV	√	√	x	√	√	√	√	√
8KV	√	x	√	√	√	√	√	√
10KV	x	√	√	√	√	√	√	√
14KV	x	√	x	√	√	√	√	x

√: Optional x: Not optional

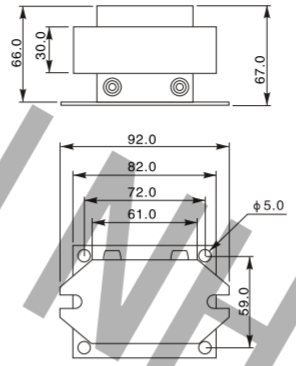

Note:The double color wire must be well grounded when you use the transformers

Technical parameters:

HT-6A□□
- Input: 220V,≤0.7A,50Hz
- Output: ≥6KV,15mA
- Outline dimension: 82X69X67mm
- Ignition distance: 2~3mm
- Ignition efficiency within 3 minutes: 33%
- Output form: Plug-in unit / Lead wire

HT-6B□□
- Input: 220V,≤0.7A,50Hz
- Output: ≥6KV,15mA
- Outline dimension: 82X69X67mm
- Ignition distance: 2~3mm
- Ignition efficiency within 3 minutes: 33%
- Output form: Plug-in unit / Lead wire

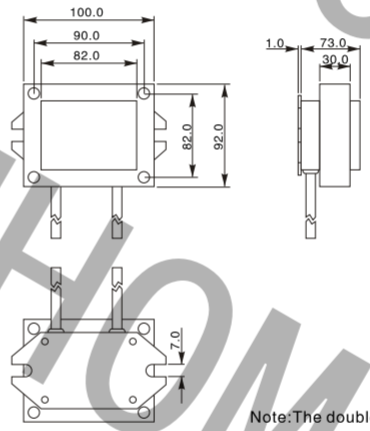

Technical parameters:

HT-8A□□□
- Input: 220V,≤1.1A,50Hz
- Output: ≥1x8KV,20mA
- Outline dimension: 100X92X73mm
- Ignition distance: 3~5mm
- Ignition efficiency within 3 minutes: 33%/100%
- Input form: Plug-in unit / Lead wire

HT-8B□□□
- Input: 220V,≤1.1A,50Hz
- Output: ≥1x8KV,20mA
- Outline dimension: 100X92X73mm
- Ignition distance: 3~5mm
- Ignition efficiency within 3 minutes: 33%/100%
- Input form: Plug-in unit / Lead wire

Note:The double color wire must be well grounded when you use the transformers

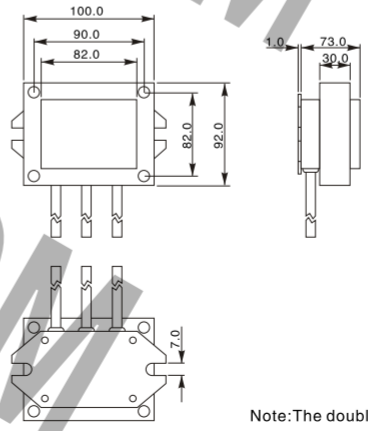

Technical parameters:

HT-10A□□□
- Input: 220V,≤1.2A,50Hz
- Output: ≥2x5KV,20mA
- Outline dimension: 100X92X73mm
- Ignition distance: 3~5mm
- Ignition efficiency within 3 minutes: 33%/100%
- Input form: Plug-in unit / Lead wire

HT-14A□
- Input: 220V,≤1.8A,50Hz
- Output: ≥2x7KV,25mA
- Outline dimension: 100X92X73mm
- Ignition distance: 4~6mm
- Ignition efficiency within 3 minutes: 25%
- Input form: Plug-in unit / Lead wire

Note:The double color wire must be well grounded when you use the transformers

SHINHOM

Electronic series high voltage ignition transformers

1. Outline:

Electronic series high voltage ignition transformers are widely used in many installations such as Auto heater,ignition of kitchen equipment ,fuel&gas heater etc .

2. Technical parameters:

	HT-12	□□-12	□□-24
Input	Voltage: 220V/50Hz	Voltage: 12V/DC	Voltage: 24V/DC
	Current: ≤0.2A	Current: ≤3A	Current: ≤1.5A
Output	Voltage: ≥1x12KV	Voltage: ≥1x14KV	Voltage: ≥1x15KV
	Current: ≥10mA	Current: ≥10mA	Current: ≥10mA
Outline dimension	70X52X61mm	83X74X37mm	110X62X60mm 95X80X62mm 83X74X37mm
Ignition distance	3~5mm	3~5mm	3~6mm
Ignition efficiency within 3 minutes	Interval time 33%	Interval time 33%	Interval time 33%
	Continuous 100%	Continuous ---	Continuous 100%
output type	Swingle polar、Bipolar	Bipolar	Swingle polar、Bipolar
USE	Ignition of Auto heater,ignition of kitchen equipment,fuel&gas heater etc		

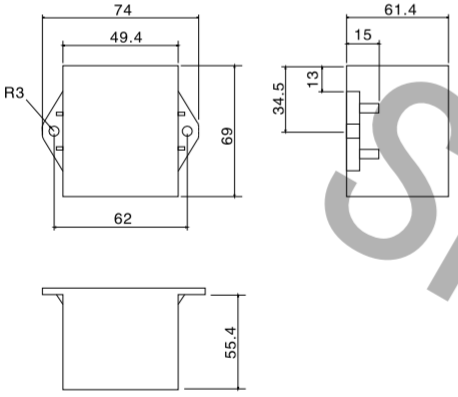

Technical parameters:

HT-12□□

Input: 220V,≤0.38A,50Hz

Output: ≥12KV

Outline dimension: 70X52X61mm

Ignition distance: 3~6mm

Ignition efficiency within 3 minutes: HT-12□: 33%

HT-12□L: 100%

Output type: Monopole ,Bipolar, XT-12A is bipolar output, two high-voltage wires outputted directly,suitable for fuel ignition;

XT-12B is monopole ,there is only one output high-voltage wire used for high-voltage output,low point of the high-voltage directly grounded through one double colour wire ,suitable for gas ignition

Note:The double color wire must be well grounded when you use the transformers

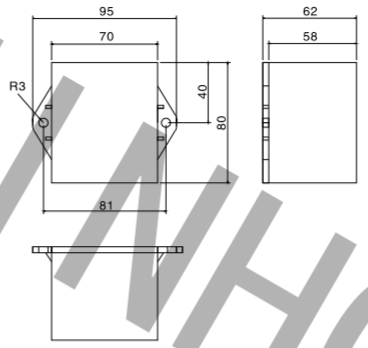

Technical parameters:

HTZ-24V

Input: 24VDC, continuous ignition 0.4~0.5A, interval ignition 0.8~1.2A

Output: ≥15KV

Outline dimension: 95X80X62mm

Ignition distance: 3~5mm

Ignition efficiency within 3 minutes: 33%/100%

Note:The double color wire must be well grounded when you use the transformers

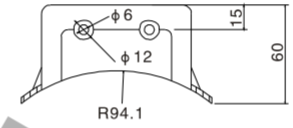

Technical parameters:

HNF-24

Input: 24VDC, 0.8~1.2A

Output: ≥15KV

Outline dimension: 116X62X60mm

Ignition distance: 3~5mm

Ignition efficiency within 3 minutes: 33%

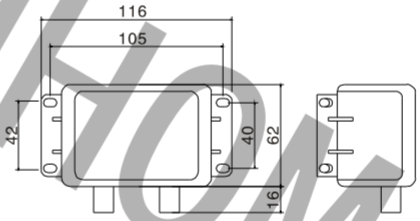

Note:The double color wire must be well grounded when you use the transformers

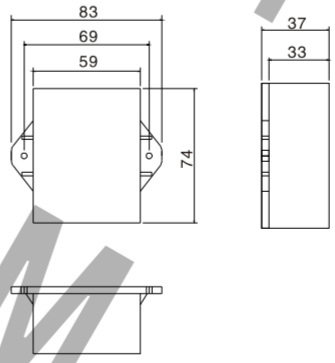

Technical parameters:

HTX-24V

Input: 24VDC, ≤0.8A

Output: ≥14KV

Outline dimension: 83X74X37mm

Ignition distance: 3~5mm

Ignition efficiency within 3 minutes: 33%

Note:The double color wire must be well grounded when you use the transformers

SHINHOM SHINHOM SHINHOM

Rev.	Description	Date
A0	New release	2023.12.19

1.PHYSICAL CHARACTERISTICS(mm)

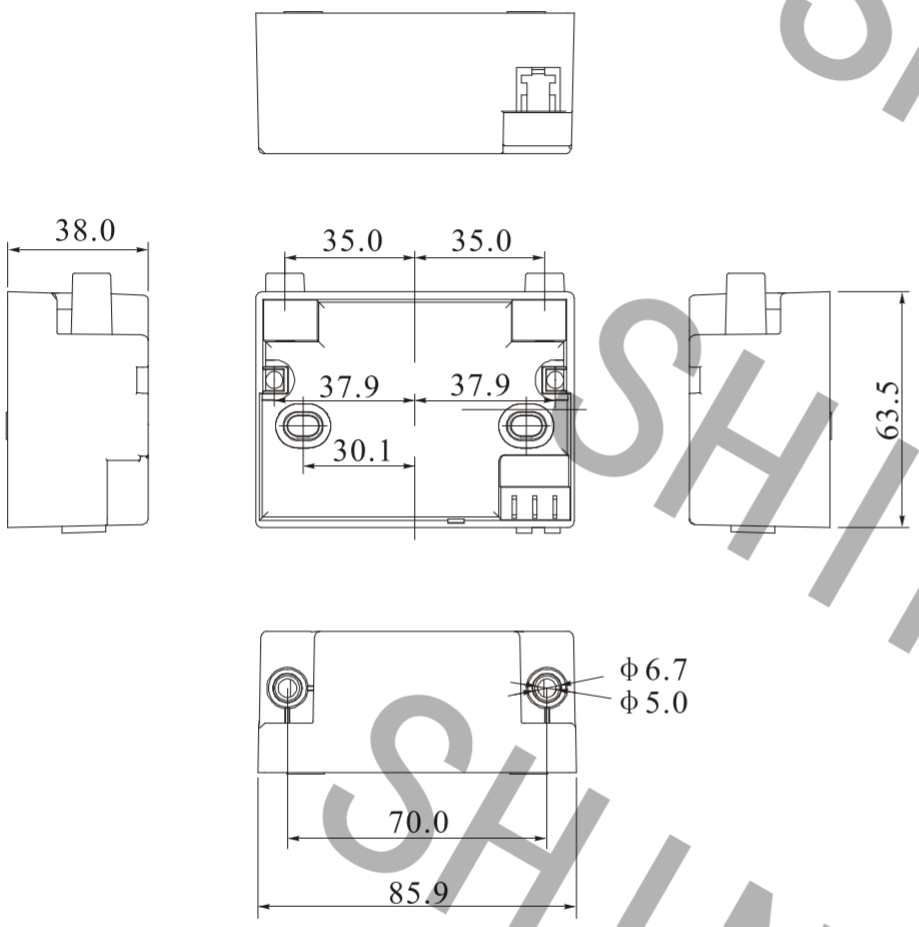

2.ELECTRONICAL SCHEMATIC

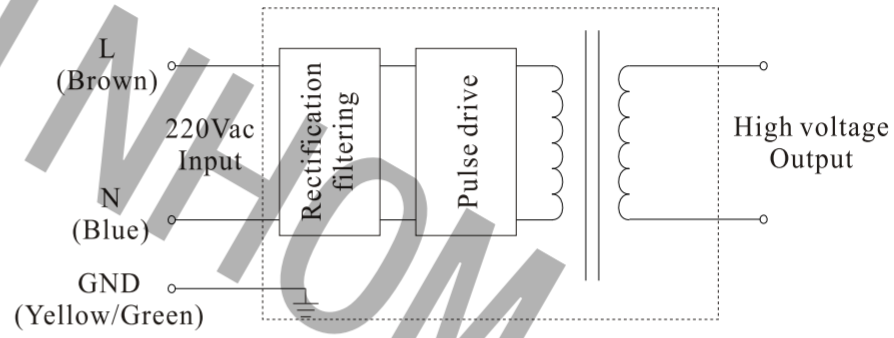

3.ELECTRONICAL SPECIFICATIONS

Input voltage: 220V ± 10%
Input current: 0.25A Max
Output voltage: 12KV(One output)
7.5kV(Two output)
Output current: 30mA Min
Ignition efficiency in three minutes: 33%(Interval work)
Ignition efficiency in three minutes: 100%(Continuous work)
Ignition distance: 3~5mm
Input lead wire: ϕ6(3x0.35mm^2), 460~520mm length
Operating temperature range: -10℃ to 55℃
(No including temp. rise)
Storage temperature range: -25℃ to 70℃

Marking

IGNITIONS TRANSFORMER
Input: 220~240V, 0.25A, 50/60Hz
Output: 12kV, 30mA, 33%ED in 3min
Danger! High voltage
Made in China
DANGER!
CE

NEME:	Ignition transformers		
CUSTOMER P/N:		DATE:	2023-12-19
SHINHOM P/N:	HT-15	REV: A0	PAGE
DRAWN BY	CHECKED BY	APPROVE BY	

SHINHOM
SHAANXISHINHOM ENTERPRISE CO LTD

The Document property belong to SHINHOM & is not allowed to be duplicated without authorization

SHINHOM SHINHOM SHINHOM

Rev.	Description	Date
A0	New release	2023.12.19

1.PHYSICAL CHARACTERISTICS(mm)

One output

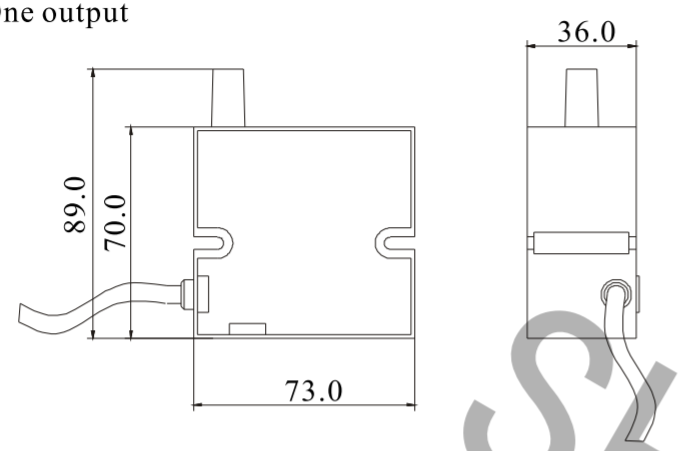

Two output

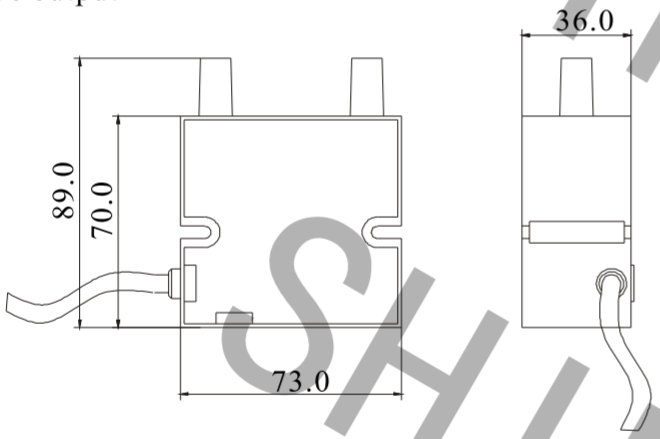

Marking

IGNITIONS TRANSFORMER
Input: 220~240V, 0.2A, 50/60Hz
Output: 18kV, 25mA, 33%ED in 3min
Danger! High voltage
Made in China
DANGER!
CE

2.ELECTRONICAL SCHEMATIC

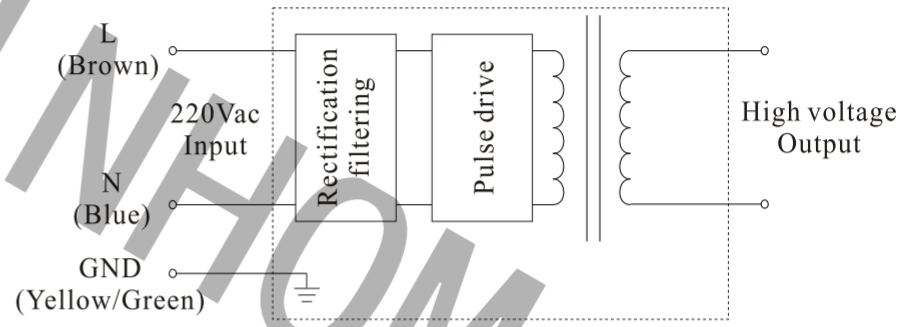

3.ELECTRONICAL SPECIFICATIONS

Input voltage: 220V ± 10%
Input current: 0.2A Max(Interval work)
0.1A Max(Continuous work)
Output voltage: 18KV(One output)
12kV(Two output)
Output current: 25mA Min
Ignition efficiency in three minutes: 33%(Interval work)
Ignition efficiency in three minutes: 100%(Continuous work)
Ignition distance: 3~5mm
Input lead wire: ϕ6(3x0.35mm^2), 460~520mm length
Operating temperature range: -10℃ to 55℃
(No including temp. rise)
Storage temperature range: -25℃ to 70℃

NEME:	Ignition transformers		
CUSTOMER P/N:		DATE:	2023-12-19
SHINHOM P/N:	HT-18	REV: A0	PAGE
DRAWN BY	CHECKED BY	APPROVE BY	

SHINHOM
SHAANXISHINHOM ENTERPRISE CO LTD

The Document property belong to SHINHOM & is not allowed to be duplicated without authorization

SHINHOM SHINHOM SHINHOM SHINHOM

Rev.	Description	Date
A0	New release	2017.12.19

1.PHYSICAL CHARACTERISTICS(mm)

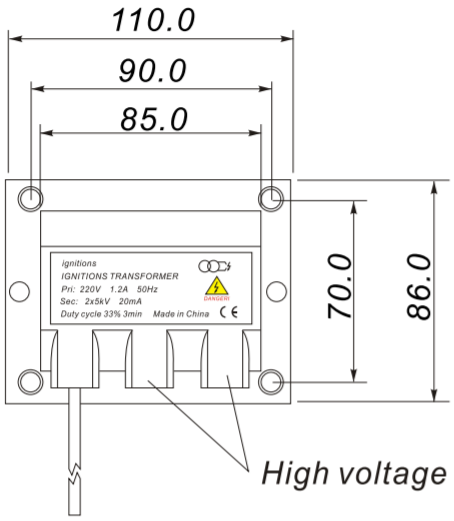

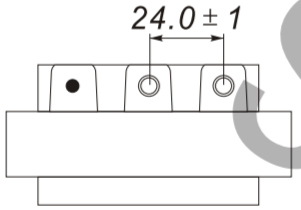

2.ELECTRONICAL SCHEMATIC

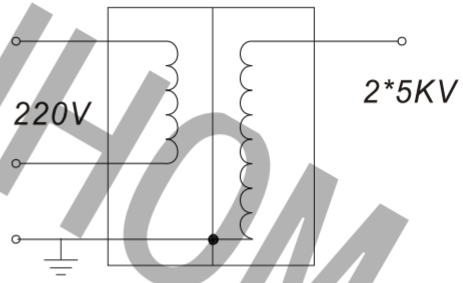

3.ELECTRONICAL SPECIFICATIONS

Pri voltage: 220V/50Hz

Pri current: 1.2A

Apparent power: 264VA

Sec voltage at open circuit: 2*5KV ± 10%

Sec current in short circuit: 20mA ± 10%

Duty cycle: 33%,3min

NOTES:

Temp 20℃ 48%RH

RoHS Compliant

NEME:	Ignition transformer		
CUSTOMER P/N:		DATE:	2017-12-19
SHINHOM P/N:	HT110-10A	REV: A0	PAGE
DRAWN BY	CHECKED BY	APPROVE BY	

SHINHOM

SHAANXISHINHOM ENTERPRISE CO LTD

TEL:+86-029-87851838
FAX:+86-029-87851840
ZIP:710054
Http://www.shinhom.com
E-mail:shinhom@globalsources.com
sales@shinhom.com.cn
NO. 8, Yanta Northern Road,Xi'an ShaanxiPro.China

SHINHOM SHINHOM SHINHOM

Rev.	Description	Date
A0	New release	2017.12.19

1.PHYSICAL CHARACTERISTICS(mm)

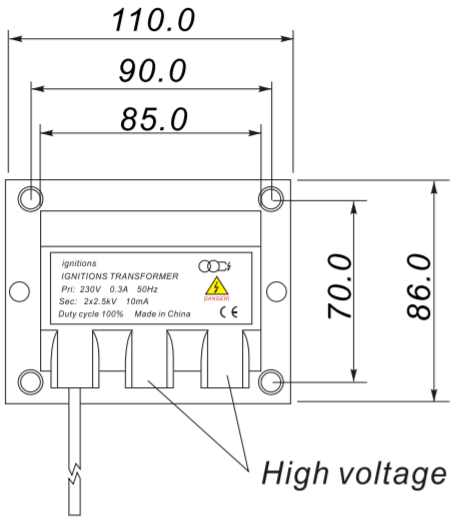

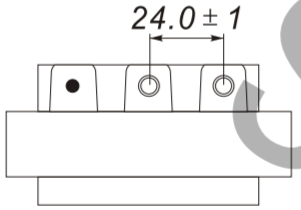

2.ELECTRONICAL SCHEMATIC

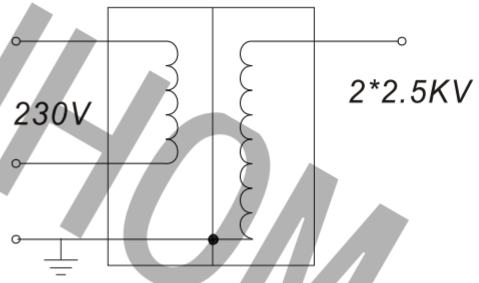

3.ELECTRONICAL SPECIFICATIONS

Pri voltage:	230V/50Hz
Pri current:	0.3A
Apparent power:	69VA
Sec voltage at open circuit:	2*2.5KV ± 10%
Sec current in short circuit:	10mA ± 10%
Duty cycle:	100%

NOTES:
Temp 20℃ 48%RH
RoHS Compliant

NEME:	Ignition transformer		
CUSTOMER P/N:		DATE:	2017-12-19
SHINHOM P/N:	HT110-10B	REV: A0	PAGE
DRAWN BY	CHECKED BY	APPROVE BY	

SHINHOM
SHINHOM
SHAANXISHINHOM ENTERPRISE CO LTD

TEL:+86-029-87851838
FAX:+86-029-87851840
ZIP:710054
Http://www.shinhom.com
E-mail:shinhom@globalsources.com
sales@shinhom.com.cn
NO. 8, Yanta Northern Road,Xi'an ShaanxiPro.China

SHINHOM SHINHOM SHINHOM

Rev.	Description	Date
A0	New release	2018.01.19

1.PHYSICAL CHARACTERISTICS(mm)

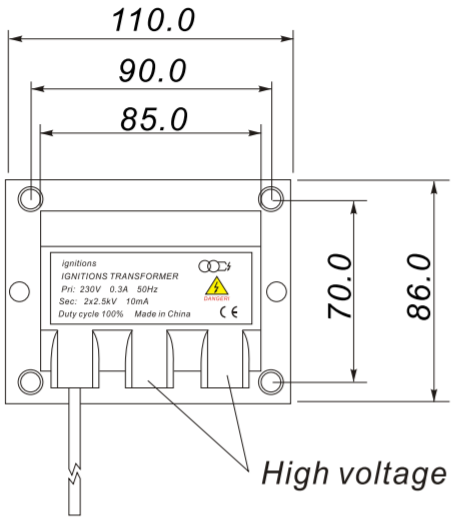

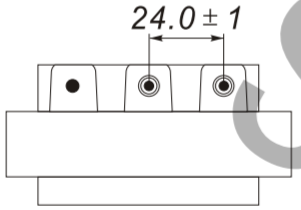

2.ELECTRONICAL SCHEMATIC

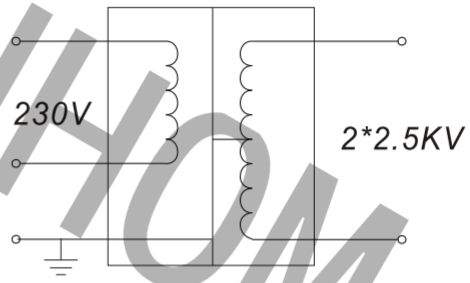

3.ELECTRONICAL SPECIFICATIONS

Pri voltage: 230V/50Hz

Pri current: 0.3A

Apparent power: 69VA

Sec voltage at open circuit: 2*2.5KV ± 10%

Sec current in short circuit: 10mA ± 20%

Duty cycle: 100%

NOTES:

Temp 20℃ 48%RH

RoHS Compliant

NEME:	Ignition transformer		
CUSTOMER P/N:		DATE:	2018-01-19
SHINHOM P/N:	HT110-10D	REV: A0	PAGE
DRAWN BY	CHECKED BY	APPROVE BY	

SHINHOM

SHINHOM

SHAANXISHINHOM ENTERPRISE CO LTD

TEL:+86-029-87851838
FAX:+86-029-87851840
ZIP:710054
Http://www.shinhom.com
E-mail:shinhom@globalsources.com
sales@shinhom.com.cn
NO. 8, Yanta Northern Road,Xi'an ShaanxiPro.China

SHINHOM SHINHOM SHINHOM

Rev.	Description	Date
A0	New release	2017.12.19

1.PHYSICAL CHARACTERISTICS(mm)

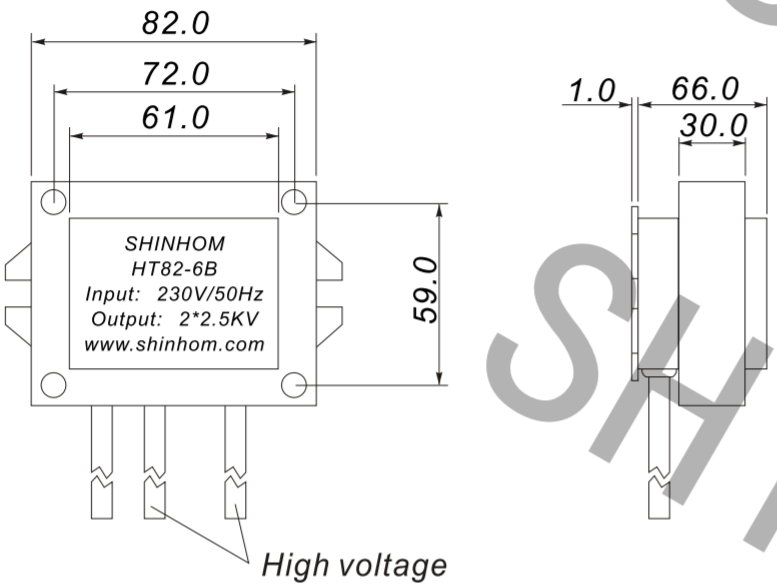

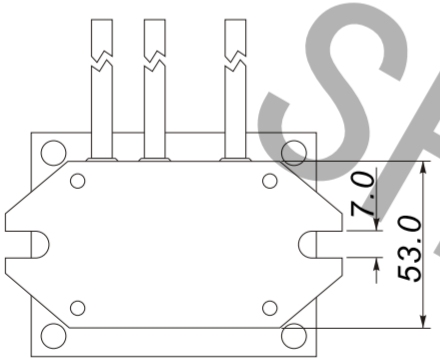

2.ELECTRONICAL SCHEMATIC

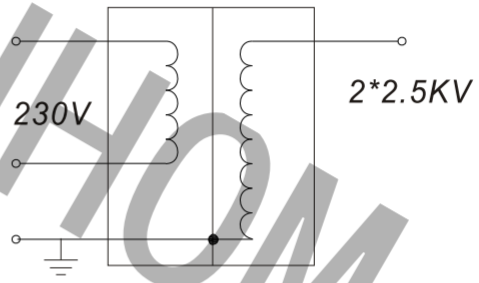

3.ELECTRONICAL SPECIFICATIONS

Pri voltage: 230V/50Hz

Pri current: 0.3A

Apparent power: 69VA

Sec voltage at open circuit: 2*2.5KV ± 10%

Sec peak voltage at open circuit: 3.54KV

Sec current in short circuit: 10mA ± 10%

NOTES:

Temp 20℃ 48%RH

RoHS Compliant

NEME:	Ignition transformer		
CUSTOMER P/N:		DATE:	2017-12-19
SHINHOM P/N:	HT82-6B	REV: A0	PAGE
DRAWN BY	CHECKED BY	APPROVE BY	

SHINHOM

SHAANXISHINHOM ENTERPRISE CO LTD

TEL:+86-029-87851838
FAX:+86-029-87851840
ZIP:710054
Http://www.shinhom.com
E-mail:shinhom@globalsources.com
sales@shinhom.com.cn
NO. 8, Yanta Northern Road,Xi'an ShaanxiPro.China

SHINHOM SHINHOM SHINHOM

Rev.	Description	Date
A0	New release	2018.01.19

1.PHYSICAL CHARACTERISTICS(mm)

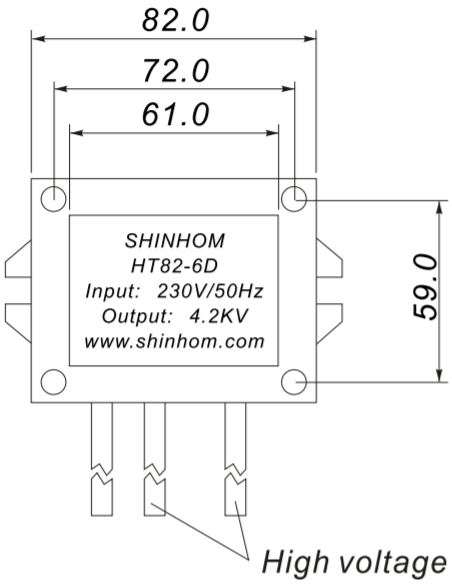

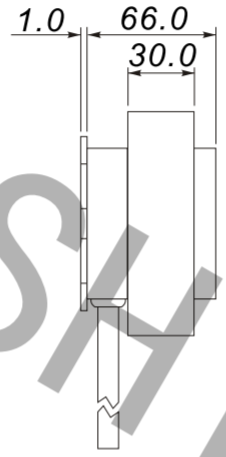

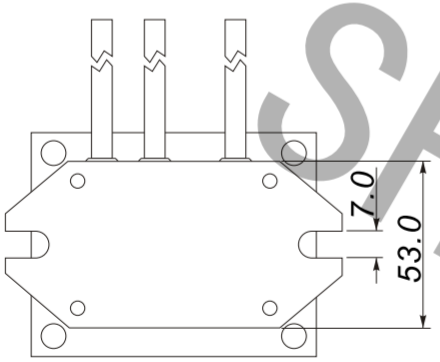

2.ELECTRONICAL SCHEMATIC

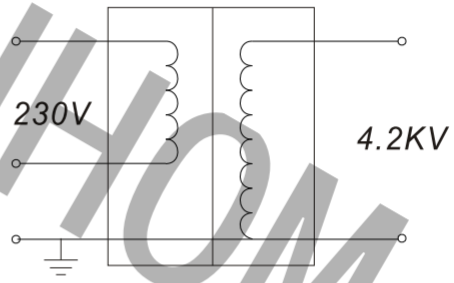

3.ELECTRONICAL SPECIFICATIONS

Pri voltage: 230V/50Hz

Pri load current: 40mA Max

Pri no-load current: 180mA Max

Apparent power: 9.2VA

Sec voltage at open circuit: 4.2KV ± 10%

Sec current in short circuit: 6mA ± 20%

NOTES:

Temp 20℃ 48%RH

RoHS Compliant

NEME:	Ignition transformer		
CUSTOMER P/N:		DATE:	2018-01-19
SHINHOM P/N:	HT82-6D	REV: A0	PAGE
DRAWN BY	CHECKED BY	APPROVE BY	

SHINHOM

SHAANXISHINHOM ENTERPRISE CO LTD

TEL:+86-029-87851838
FAX:+86-029-87851840
ZIP:710054
Http://www.shinhom.com
E-mail:shinhom@globalsources.com
sales@shinhom.com.cn
NO. 8, Yanta Northern Road,Xi'an ShaanxiPro.China

SHINHOM SHINHOM SHINHOM

Rev.	Description	Date
A0	New release	2018.01.19

1.PHYSICAL CHARACTERISTICS(mm)

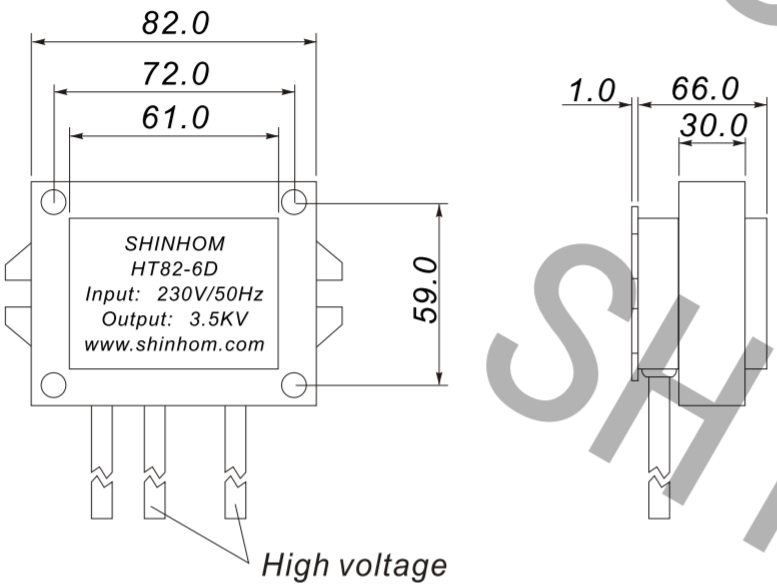

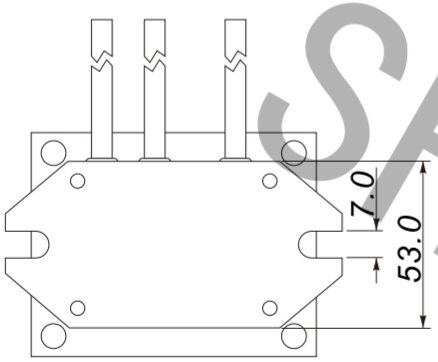

2.ELECTRONICAL SCHEMATIC

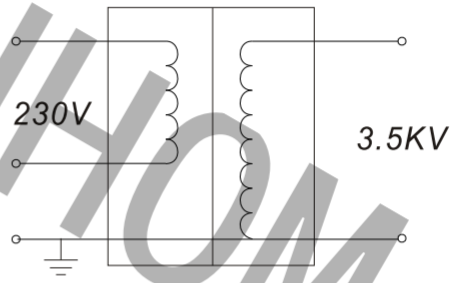

3.ELECTRONICAL SPECIFICATIONS

Pri voltage: 230V/50Hz

Pri load current: 40mA Max

Pri no-load current: 150mA Max

Apparent power: 9.2VA

Sec voltage at open circuit: 3.5KV ± 10%

Sec current in short circuit: 6mA ± 20%

NOTES:

Temp 20℃ 48%RH

RoHS Compliant

SHINHOM SHINHOM SHINHOM SHINHOM

NEME:	Ignition transformer		
CUSTOMER P/N:		DATE:	2018-01-19
SHINHOM P/N:	HT82-6E	REV: A0	PAGE
DRAWN BY	CHECKED BY	APPROVE BY	

SHINHOM
SHAANXISHINHOM ENTERPRISE CO LTD

TEL:+86-029-87851838
FAX:+86-029-87851840
ZIP:710054
Http://www.shinhom.com
E-mail:shinhom@globalsources.com
sales@shinhom.com.cn
NO. 8, Yanta Northern Road,Xi'an ShaanxiPro.China

Rev.	Description	Date
A0	New release	2017.12.19

1.PHYSICAL CHARACTERISTICS(mm)

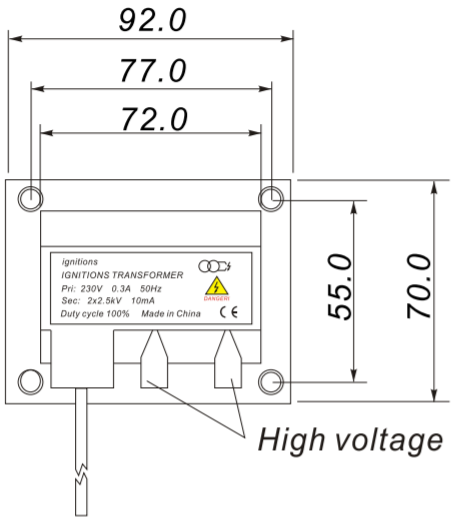

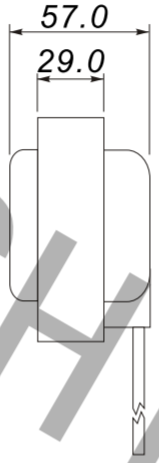

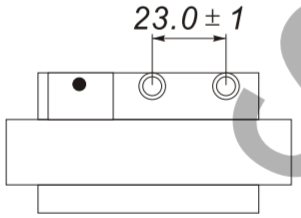

2.ELECTRONICAL SCHEMATIC

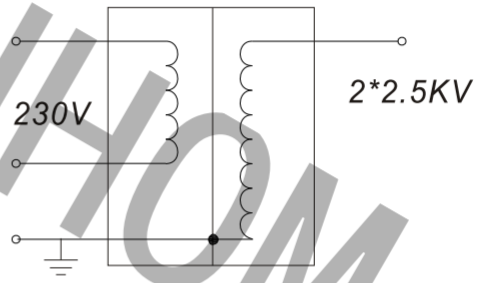

3.ELECTRONICAL SPECIFICATIONS

Pri voltage: 230V/50Hz

Pri current: 0.3A

Apparent power: 69VA

Sec voltage at open circuit: 2*2.5KV ± 10%

Sec peak voltage at open circuit: 3.54KV

Sec current in short circuit: 10mA ± 10%

NOTES:

Temp 20℃ 48%RH

RoHS Compliant

NEME:	Ignition transformer		
CUSTOMER P/N:		DATE:	2017-12-19
SHINHOM P/N:	HT92-7A	REV: A0	PAGE
DRAWN BY	CHECKED BY	APPROVE BY	

SHINHOM

SHINHOM

SHAANXISHINHOM ENTERPRISE CO LTD

TEL:+86-029-87851838
FAX:+86-029-87851840
ZIP:710054
Http://www.shinhom.com
E-mail:shinhom@globalsources.com
sales@shinhom.com.cn
NO. 8, Yanta Northern Road,Xi'an ShaanxiPro.China

SHINHOM SHINHOM SHINHOM